Philips FlowStar Gen2: keep traffic moving safely in critical tunnel lighting conditions

FlowStar Gen2

For the most demanding conditions, where corrosion is a real threat, tunnel owners want tunnel luminaires that deliver cost, safety and availability benefits over their entire lifetime. With a high-grade, corrosion-resistant, full stainless steel build and dedicated LED design, Philips FlowStar Gen2 delivers all that – and more. FlowStar Gen2 is part of the Philips TotalTunnel solution. Combined with lighting controls, cables and our lifecycle services, these tunnel luminaires offer the highest levels of performance with exactly the right balance of visibility, safety and economy. And thanks to a high lumen output, they can also reduce the number of project luminaires required without compromising safety. A long-lasting and highly-efficient solution for tunnel lighting or underpass lighting that will keep traffic safe and moving.

Benefits

- Reliable and long-lasting for traffic tunnels in highly corrosive environments
- Undisputed corrosion resistance, full stainless steel build
- Highly efficient to reduce energy consumption
- High lumen output to reduce number of project luminaires
- Easy to clean, and self-drainable top

FlowStar Gen2

Features

- High-grade stainless-steel housing with no external aluminum parts
- Flat top, no ribs of fins
- Wide choice of excellent quality optics
- Flexible mounting with quick release for easy maintenance
- Compatible with tunnel controls from Philips and third parties
- Service tag: QR-based identification for maintenance, installation and spare part information

Application

- Tunnel
- Underpass

Versions

BGB308 FlowStar Gen2 Large

BGB307 FlowStar Gen2 Medium

Dimensional drawing

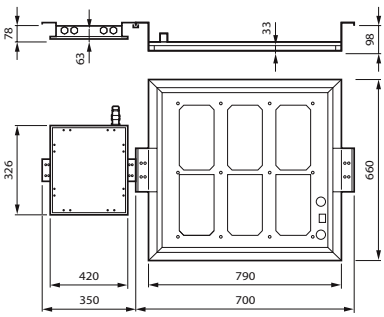

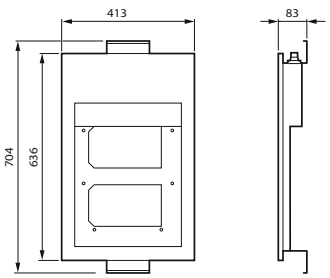

FlowStar Gen2

Dimensional drawing

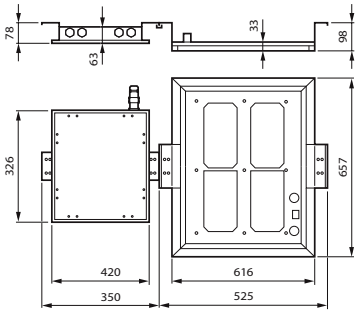

Product details

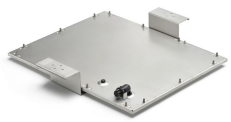

BGB307_FlowStar Gen2 LED unit
Medium_interfaces

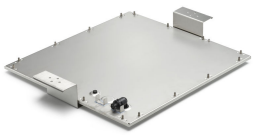

BGB308_FlowStar Gen2 LED unit
Large_Interfaces

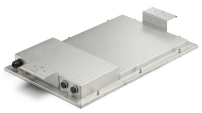

BGB306_FlowStar Gen2
Small_Backside

BGB305_FlowStar Gen2
Mini_Backside details

FlowStar Gen2

General Information	
CE mark	Yes
Driver included	Yes
Flammability mark	For mounting on normally flammable surfaces
Light source replaceable	Yes
Light Technical	
Light source color	740 neutral white
Correlated Color Temperature (Nom)	4000 K
Optical cover type	Glass flat with frame
Color rendering index (CRI)	70
Standard tilt angle side entry	0°
Standard tilt angle posttop	-
Upward light output ratio	0
Controls and Dimming	
Dimmable	Yes
Mechanical and Housing	
Housing Color	Steel
Approval and Application	
Mech. impact protection code	IK09
Ingress protection code	IP66
Surge Protection (Common/ Differential)	Philips standard surge protection level
Application Conditions	
Maximum dim level	10%

General Information

Order Code	Full Product Name	Lamp family code	Number of gear units	Product family code
912300060015	BGB308 LED720/740 DTX1-HT D9 STD MICIO F	LED720	3 units	BGB308
912300060127	BGB307 LED500/740 DSM11 D9 STD MICIO FU	LED500	1 unit	BGB307
912300060014	BGB306 LED230/740 DSM11 D9 MICIO FU BA	LED230	1 unit	BGB306
912300060126	BGB306 LED230/740 DSM11 D9 STD MICIO FU	LED230	1 unit	BGB306

Light Technical

Order Code	Full Product Name	Luminaire light beam spread	Luminous Flux	Optic type outdoor
912300060015	BGB308 LED720/740 DTX1-HT D9 STD MICIO F	152° x 155°	57,600 lm	Asymmetrical
912300060127	BGB307 LED500/740 DSM11 D9 STD MICIO FU	101° x 158°	40,500 lm	Distribution symmetrical medium 11

Order Code	Full Product Name	Luminaire light beam spread	Luminous Flux	Optic type outdoor
912300060014	BGB306 LED230/740 DSM11 D9 MICIO FU BA	101° x 158°	20,010 lm	Distribution symmetrical medium 11
912300060126	BGB306 LED230/740 DSM11 D9 STD MICIO FU	101° x 158°	18,860 lm	Distribution symmetrical medium 11

Operating and Electrical

Order Code	Full Product Name	Power Consumption
912300060015	BGB308 LED720/740 DTX1-HT D9 STD MICIO F	425 W
912300060127	BGB307 LED500/740 DSM11 D9 STD MICIO FU	300 W

Order Code	Full Product Name	Power Consumption
912300060014	BGB306 LED230/740 DSM11 D9 MICIO FU BA	136 W
912300060126	BGB306 LED230/740 DSM11 D9 STD MICIO FU	136 W

© 2023 Signify Holding All rights reserved. Signify does not give any representation or warranty as to the accuracy or completeness of the information included herein and shall not be liable for any action in reliance thereon. The information presented in this document is not intended as any commercial offer and does not form part of any quotation or contract, unless otherwise agreed by Signify. All trademarks are owned by Signify Holding or their respective owners.