BPS 741 / 742 - City Wing

Mounting instructions

Instructions de montage
Montageanleitung
Montage instruktie
Istruzioni di montaggio
Instrucciones de montaje
Instruções de montagem
Monteringsinstruktioner
Monteringsvejledning
Kokoonpano- ja kiinnitysohjeet
Montaj yönergesi
ΟδθηεΧ τφξασνομηθτθΧ
Instrukcja montazu
Szerelési utasítások
Návod k montázi
bycnherwbz gj vjynf:e
Návod k montázi

TYPE	OPTICS	LED			ALIM	IP..	P max. (W)	kg max.
BPS 741 BPS 742	ROTATION-SYMMETRICAL	18	2 X 1 X		U = 30 V max.	**IP65**	2 x 90	16
					Un = 220-240 VAC/50-60Hz	**IP43**		

If any part of this luminaire (including external flexible supply cable) is damaged, the luminaire should be destroyed.

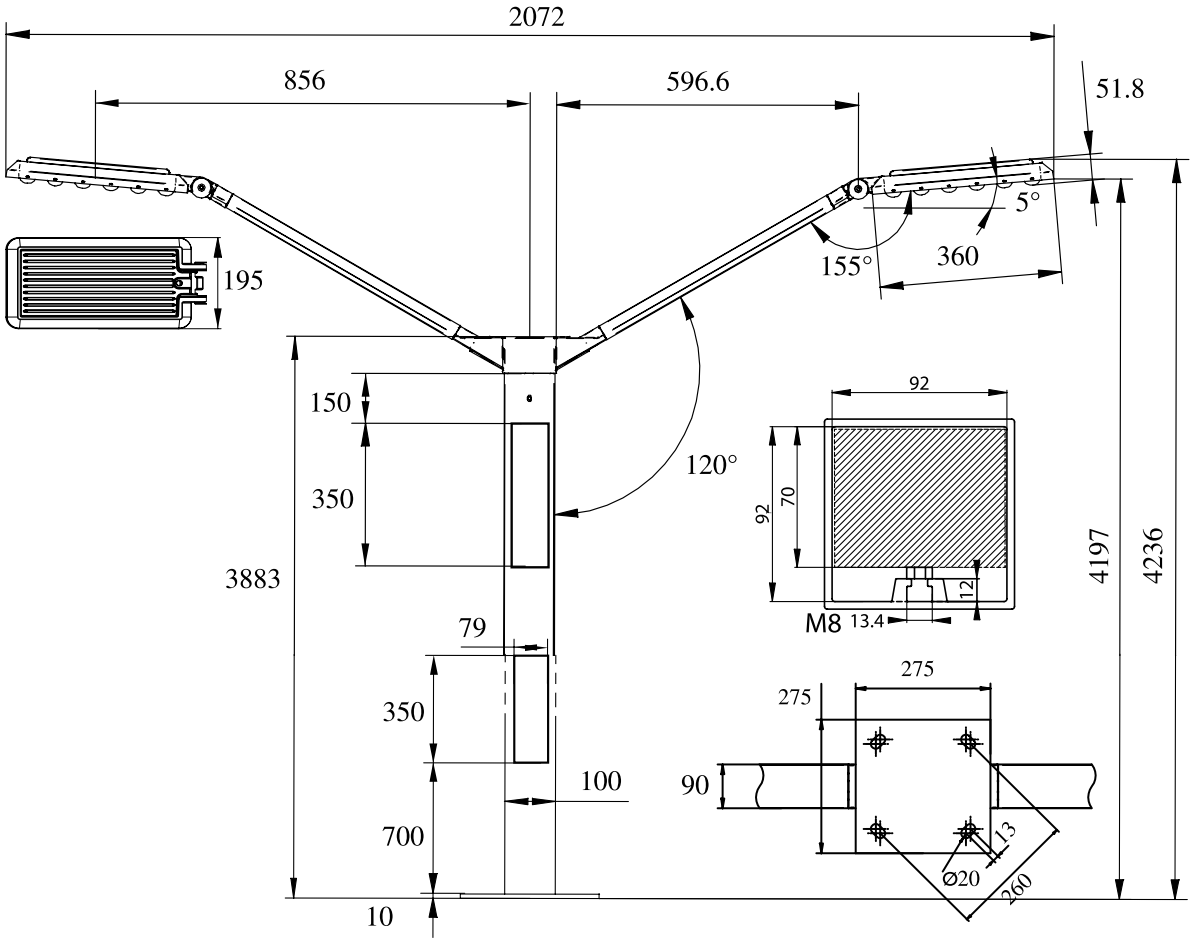

4411 102 66352
06/2007
Data subject to change
Printed in France
www.philips.com/lighting

PHILIPS

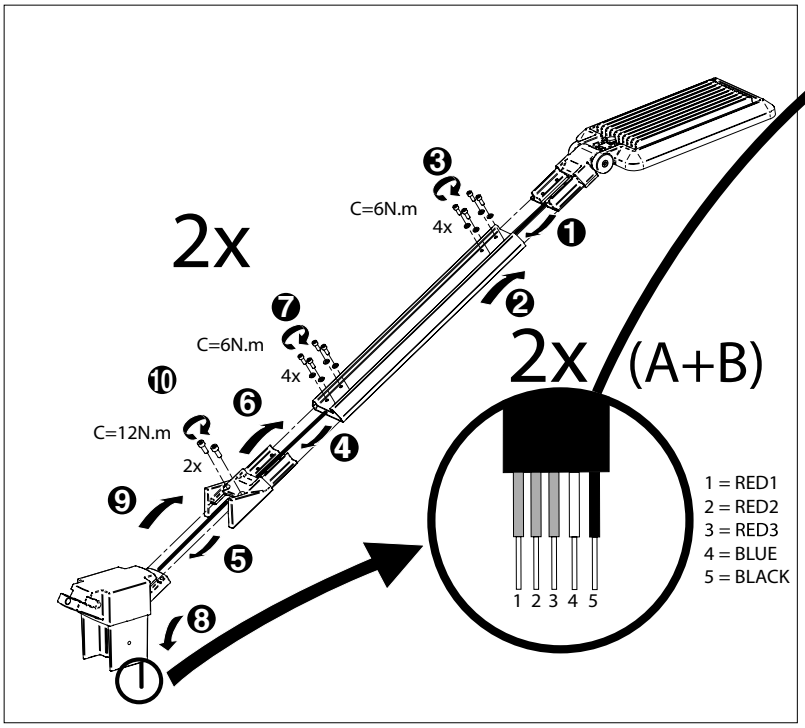
2x
C=6N.m
4x
C=6N.m
4x
C=12N.m
2x
2x (A+B)
1 = RED1
2 = RED2
3 = RED3
4 = BLUE
5 = BLACK
1 2 3 4 5

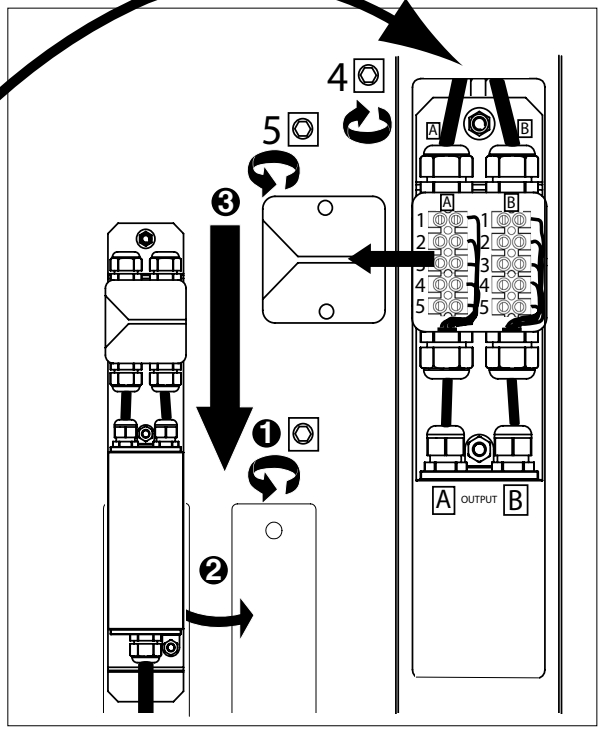
4
5
A
B
OUTPUT

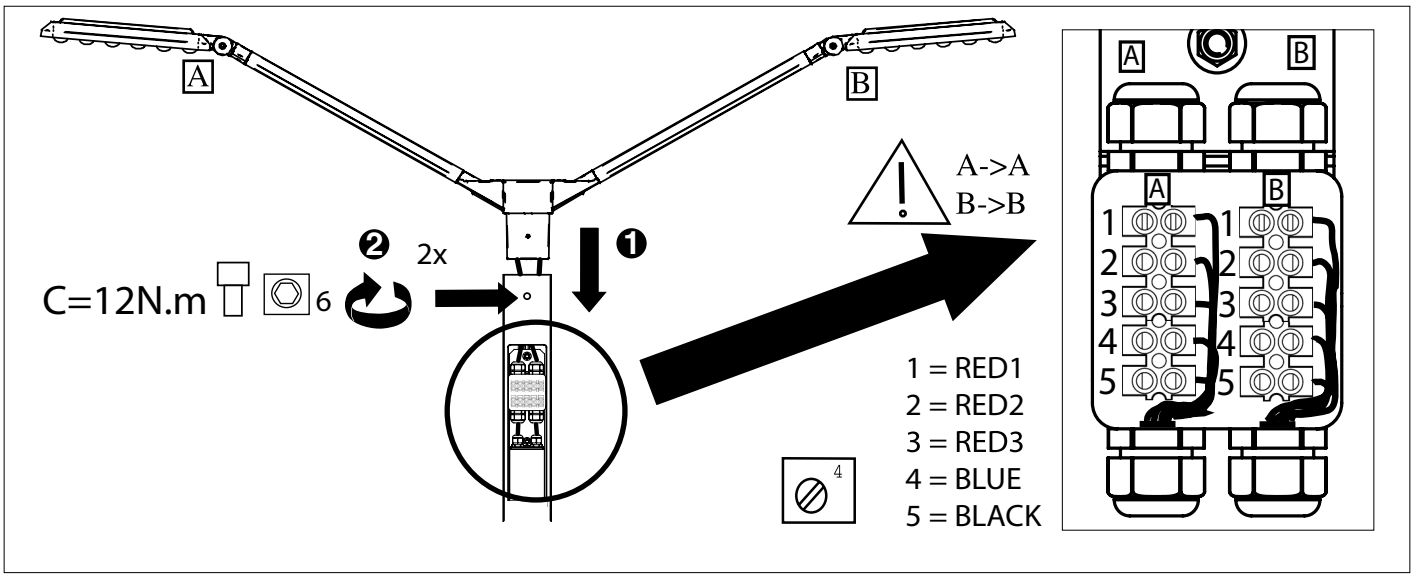
A
B
C=12N.m
6
2x
A->A
B->B
1 = RED1
2 = RED2
3 = RED3
4 = BLUE
5 = BLACK
4

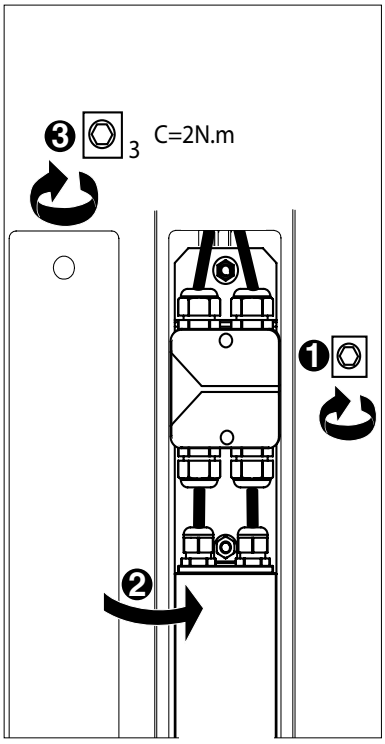
3
C=2N.m

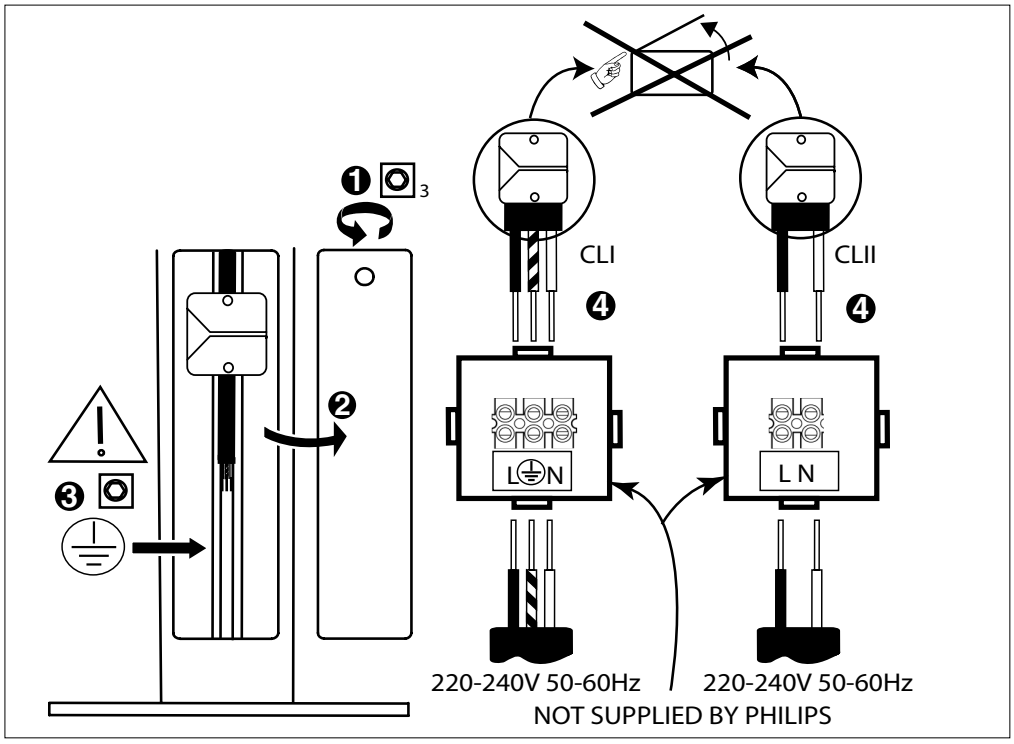
3
CLI
CLII
L N
L N
220-240V 50-60Hz
220-240V 50-60Hz
NOT SUPPLIED BY PHILIPS